Summary in Graph

Exam Summary (GATE Overflow CS Test Series 2026 | Digital Logic | Test 1)

Qs. Attempted:	0 (0 + 0)	Correct Marks:	0 (0 + 0)
Correct Attempts:	0 (0 + 0)	Penalty Marks:	0 (0 + 0)
Incorrect Attempts:	0 (0 + 0)	Resultant Marks:	0 (0 + 0)

Total Questions:	30 (10 + 20)
Total Marks:	50 (10 + 40)
Exam Duration:	90 Minutes
Time Taken:	0 Minutes

Individual Question Statistics

Select Metric: Marks Obtained

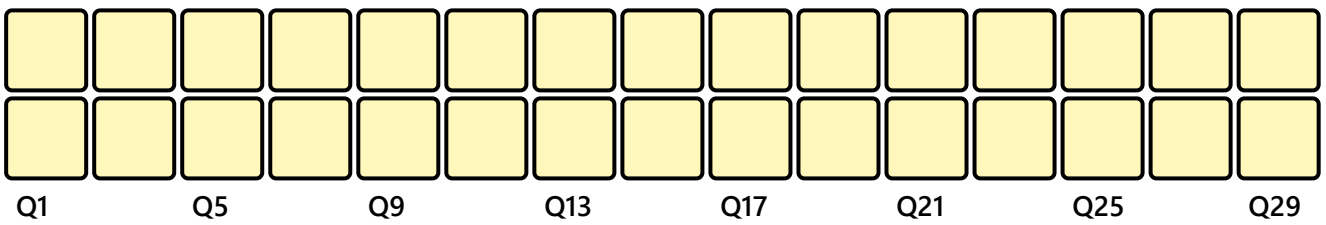

* Average Stats based on first-attempt stats of Top 10% (8) out of 76 users

EXAM RESPONSE | EXAM STATS | FEEDBACK

Technical

Q #1 | Multiple Choice Type | Award: 1 | Penalty: 0.33 | Digital Logic

Which of the following boolean expression is not equal to the other three?

A. $x' \oplus y$
B. $xy + x'y'$
C. $x' \oplus y'$
D. $x \oplus y'$

Your Answer: | Correct Answer: C | Not Attempted | Time taken: 00min 00sec | Discuss

Q #2 | Multiple Choice Type | Award: 1 | Penalty: 0.33 | Digital Logic

Which of the following functions is not associative?

A. AND
B. OR
C. EXOR
D. NAND

Your Answer: | Correct Answer: D | Not Attempted | Time taken: 00min 00sec | Discuss

Q #3 | Multiple Choice Type | Award: 1 | Penalty: 0.33 | Digital Logic

In which of the following signed number representations we have more positive numbers than negative numbers?

A. $1's$ Complement Representation
B. $2's$ Complement Representation
C. Sign magnitude Representation
D. None of the Above

Your Answer: | Correct Answer: D | Not Attempted | Time taken: 00min 00sec | Discuss

Q #4 | Multiple Choice Type | Award: 1 | Penalty: 0.33 | Digital Logic

The decimal number 31.03125 can be expressed in scientific notation as :

A. $1.111100001 * 2^2$
B. $1.111100011 * 2^3$
C. $1.111100001 * 2^4$
D. $1.111000001 * 2^3$

Your Answer: | Correct Answer: C | Not Attempted | Time taken: 00min 00sec | Discuss

Q #5 | Multiple Choice Type | Award: 1 | Penalty: 0.33 | Digital Logic

Which of the following statement(s) is/are true?

A. AND and OR are dual to each other
B. NAND and NOR are dual to each other
C. XOR and XNOR are dual to each other
D. All the above

Your Answer: | Correct Answer: D | Not Attempted | Time taken: 00min 00sec | Discuss

Q #6 | Multiple Choice Type | Award: 1 | Penalty: 0.33 | Digital Logic

The Boolean expression $(A'BC)' + (AB'C')'$ simplifies to which of the following options?

A. 0
B. B
C. 1
D. AC

Your Answer: | Correct Answer: C | Not Attempted | Time taken: 00min 00sec | Discuss

Q #7 | Multiple Select Type | Award: 1 | Penalty: 0 | Digital Logic

Which of the following is true about the rules of Boolean addition? (Mark all the appropriate choices)

A. $0 + 0 = 0 \text{ and } 0 + 1 = 1$
B. $1 + 0 = 1 \text{ and } 1 + 1 = 0$
C. $1 + 0 = 1 \text{ and } 1 + 1 = 1$
D. $0 + 0 = 0 \text{ and } 0 + 1 = 0$

Your Answer: | Correct Answer: A;C | Not Attempted | Time taken: 00min 00sec | Discuss

Q #8 | Multiple Select Type | Award: 1 | Penalty: 0 | Digital Logic

If $A \odot B = C$, ($\odot$ is XNOR operator) then which of the following is/are TRUE? (Mark all the appropriate choices)

A. $A \odot C = B$
B. $B \odot C = A$
C. $A \odot B \odot C = 1$
D. $A \odot B \odot C = 0$

Your Answer: | Correct Answer: A;B;C | Not Attempted | Time taken: 00min 00sec | Discuss

Q #9 | Multiple Choice Type | Award: 1 | Penalty: 0.33 | Digital Logic

Which of the following multiplier input causes the least number of additions (subtraction being implemented as $2's$ complement addition) for a Booth's multiplier?

A. 111110
B. 000000
C. 111111
D. 010101

Your Answer: | Correct Answer: B | Not Attempted | Time taken: 00min 02sec | Discuss

Q #10 | Numerical Type | Award: 1 | Penalty: 0 | Digital Logic

Assume that the propagation delay in each gate in a 16-bit ripple carry adder (made of AND, OR and NOT gates only with upto 3 inputs) is $1ns$. Time taken in nanoseconds to perform a 16-bit addition is _____.

Your Answer: | Correct Answer: 33 | Not Attempted | Time taken: 00min 00sec | Discuss

Q #11 Multiple Choice Type | Award: 2 | Penalty: 0.67 | Digital Logic

Which of the following decimal number does not cause a loss of precision when represented in IEEE-754 single precision representation?

A. $4096 \times 4096 \times 4096$
B. 248248248
C. 35797531
D. 123456700

Your Answer: | Correct Answer: A | Not Attempted | Time taken: 00min 00sec | Discuss

Q #12 Multiple Choice Type | Award: 2 | Penalty: 0.67 | Digital Logic

Which of the following $32-bit$ bits stream correctly represents the maximum possible normalized value represented in IEEE-754 single-precision representation?

A. $\underbrace{0}_{\text{sign}}\ \underbrace{11111111}_{\text{exponent}}\underbrace{11111111111111111111111}_{\text{mantissa}}$
B. $\underbrace{0}_{\text{sign}}\ \underbrace{11111111}_{\text{exponent}}\underbrace{11111111111111111111110}_{\text{mantissa}}$
C. $\underbrace{0}_{\text{sign}}\ \underbrace{11111110}_{\text{exponent}}\underbrace{11111111111111111111110}_{\text{mantissa}}$
D. $\underbrace{0}_{\text{sign}}\ \underbrace{11111110}_{\text{exponent}}\underbrace{11111111111111111111111}_{\text{mantissa}}$

Your Answer: | Correct Answer: D | Not Attempted | Time taken: 00min 00sec | Discuss

Q #13 Multiple Choice Type | Award: 2 | Penalty: 0.67 | Digital Logic

Let A be the maximum value represented in IEEE-754 single-precision representation and B be the maximum value represented in IEEE-754 double precision representation (both ignoring infinities and other special values). B/A approximates to

A. 10^{23}
B. 10^{270}
C. 10^{99}
D. 10^{308}

Your Answer: | Correct Answer: B | Not Attempted | Time taken: 00min 00sec | Discuss

Q #14 Multiple Choice Type | Award: 2 | Penalty: 0.67 | Digital Logic

Which of the following is/are special values in IEEE-754 single precision representation?

1. All mantissa bits $0s$
2. All exponent bits $1s$
3. All exponent bits $0s$
4. All mantissa bits $1s$
5. Both mantissa and exponent bits all $0s$
6. Both mantissa and exponent bits all $1s$

A. 1 and 4 only

B. 1, 4, 5 and 6 only
C. 2, 3, 5 and 6 only
D. 5 and 6 only

Your Answer: | Correct Answer: C | Not Attempted | Time taken: 00min 00sec | Discuss

Q #15 Multiple Choice Type | Award: 2 | Penalty: 0.67 | Digital Logic

If $2's$ complement representation of the decimal number d is X and $2's$ complement representation of $-d$ is Y, $X \odot Y$ is ($\odot$ is XNOR operator)

A. all bits $0s$
B. all bits $1s$
C. a power of 2
D. 1 less than a power of 2

Your Answer: | Correct Answer: D | Not Attempted | Time taken: 00min 00sec | Discuss

Q #16 Multiple Choice Type | Award: 2 | Penalty: 0.67 | Digital Logic

A logic circuit implements the following Boolean function: $F = A'C + ACD'$
It is found that the circuit input combination $A = D = 1$ can never occur. The simplified expression for F using the proper don't-care conditions is

A. $F = A'C$
B. $F = CD'$
C. $F = C$
D. $F = A'C + CD'$

Your Answer: | Correct Answer: C | Not Attempted | Time taken: 00min 00sec | Discuss

Q #17 Multiple Choice Type | Award: 2 | Penalty: 0.67 | Digital Logic

A boolean function F together with the don't care condition d; are given below
$F(A, B, C, D) = \sum(1, 3, 5, 7, 9, 15)$
$d(A, B, C, D) = \sum(4, 6, 12, 14)$.

The simplified form of F can be expressed in the sum of minterms as

A. $\sum(1, 3, 5, 6, 7, 9, 14, 15)$
B. $\sum(1, 3, 5, 6, 7, 9, 15)$
C. $\sum(1, 3, 5)$
D. $\sum(1, 3, 5, 7, 9, 15)$

Your Answer: | Correct Answer: A | Not Attempted | Time taken: 00min 00sec | Discuss

Q #18 Numerical Type | Award: 2 | Penalty: 0 | Digital Logic

If the number of prime implicants and essential prime implicants of $F(A, B, C, D) = \sum(0, 6, 8, 13, 14)$ are represented by m and n respectively, the value of $2^m \times 3^n =$

Your Answer: | Correct Answer: 216 | Not Attempted | Time taken: 00min 00sec | Discuss

Q #19 Numerical Type | Award: 2 | Penalty: 0 | Digital Logic

A decimal number has 32 digits. The minimum number of digits required to accurately represent the number in binary is _____.

Your Answer: | Correct Answer: 107 | Not Attempted | Time taken: 00min 00sec | Discuss

Q #20 Numerical Type | Award: 2 | Penalty: 0 | Digital Logic

If the number of Boolean functions that can be formed over 4 distinct boolean variables is $d, \log_2 d =$ _____

Your Answer: | Correct Answer: 16 | Not Attempted | Time taken: 00min 00sec | Discuss

Q #21 Multiple Choice Type | Award: 2 | Penalty: 0.67 | Digital Logic

Which of the following statements is INCORRECT?

1. Dual of a boolean expression is obtained by interchanging OR and AND operators and $0's$ and $1's$
2. A boolean statement is valid if and only if its dual is valid
3. Dual of a boolean expression is obtained by interchanging OR and AND operators and $0's$ and $1's$ and by complementing all literals
4. There exist boolean functions for which dual and complement are the same

A. only 3
B. $2, 3$ and 4
C. only 4
D. 3 and 4

Your Answer: | Correct Answer: A | Not Attempted | Time taken: 00min 00sec | Discuss

Q #22 Numerical Type | Award: 2 | Penalty: 0 | Digital Logic

Two decimal numbers are represented in fixed point representation as 1111.001 and 10.111. The sum of the two numbers rounded to the nearest integer is (assume no overflow) _____.

Your Answer: | Correct Answer: 18 | Not Attempted | Time taken: 00min 00sec | Discuss

Q #23 Multiple Choice Type | Award: 2 | Penalty: 0.67 | Digital Logic

If $A = B = C = 1, F$ and G are respectively

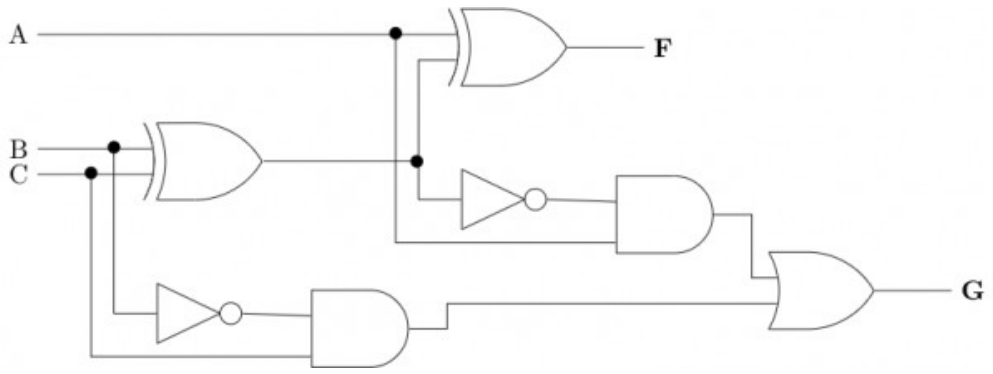

A. $1, 0$
B. $1, 1$
C. $0, 0$
D. $0, 1$

Your Answer: | Correct Answer: B | Not Attempted | Time taken: 00min 00sec | Discuss

Q #24 Multiple Choice Type | Award: 2 | Penalty: 0.67 | Digital Logic

The implicants being chosen for the circuit implementation are marked in the following four Karnaugh-maps. In which of them, a static-1 hazard is not possible?

A.

wx \ yz	00	01	11	10
00	0	0	0	0
01	1	1	1	0
11	0	1	1	0
10	0	0	1	0

B.

wx \ yz	00	01	11	10
00	0	0	0	0
01	1	1	1	0
11	0	1	1	0
10	0	0	1	0

C.

wx \ yz	00	01	11	10
00	0	0	0	0
01	1	1	1	0
11	0	1	1	0
10	0	0	1	0

D.

wx \ yz	00	01	11	10
00	0	0	0	0
01	1	1	1	0
11	0	1	1	0
10	0	0	1	0

Your Answer: | Correct Answer: A | Not Attempted | Time taken: 00min 00sec | Discuss

Q #25 Multiple Choice Type | Award: 2 | Penalty: 0.67 | Digital Logic

The 16 bit $2's$ complement representation and the hexadecimal representation after finding 2's complement of the decimal number 2688, respectively are:

A. $0000\ 1010\ 1000\ 0000$, `0xF580`
B. $1111\ 0101\ 1000\ 0000$, `0x0A80`
C. $1111\ 0101\ 1000\ 0000$, `0xF580`
D. $0000\ 1010\ 1000\ 0000$, `0x0A80`

Your Answer: | Correct Answer: C | Not Attempted | Time taken: 00min 00sec | Discuss

Q #26 Multiple Choice Type | Award: 2 | Penalty: 0.67 | Digital Logic

The decimal and hexadecimal representation for the bit string 1111110000100101, represented in $16-bit$ $1's$ complement representation are:

A. -986, 0xFC25
B. 3109, 0xFC25
C. 3109, 0xF3DA
D. 986, 0xF3DA

Your Answer: | Correct Answer: A | Not Attempted | Time taken: 00min 00sec | Discuss

Q #27 Numerical Type | Award: 2 | Penalty: 0 | Digital Logic

Let M be the maximum unsigned integer value representable with 4 bits and N be the maximum signed value representable with 4 bits (using 2's complement representation). $M - N =$ _____.

Your Answer: | Correct Answer: 8 | Not Attempted | Time taken: 00min 00sec | Discuss

Q #28 Multiple Choice Type | Award: 2 | Penalty: 0.67 | Digital Logic

The IEEE-754 single precision floating point representation (in hexadecimal format) for the decimal number 16.125 is?

A. 0x41810000
B. 0x02010000
C. 0x02C08000
D. 0x42401000

Your Answer: | Correct Answer: A | Not Attempted | Time taken: 00min 00sec | Discuss

Q #29 Multiple Choice Type | Award: 2 | Penalty: 0.67 | Digital Logic

Which of the following is correct regarding denormalized numbers in IEEE-754 floating point representation?

A. Denormalized numbers can represent a larger value than that can be represented by a normalized number
B. Denormalized numbers has higher precision than normalized numbers
C. The maximum negative value that can be represented by a denormalized number is larger than that represented by a normalized number
D. All of the above

Your Answer: | Correct Answer: C | Not Attempted | Time taken: 00min 00sec | Discuss

Q #30 Multiple Choice Type | Award: 2 | Penalty: 0.67 | Digital Logic

Which of the following is the correct way to represent a signed decimal number in $2's$ complement representation as a sum of powers of 2?

A. $(b_{n-1}b_{n-2}\ldots b_2b_1b_0)_2 \equiv \sum_{i=0}^{n-1} b_i 2^i$
B. $(b_{n-1}b_{n-2}\ldots b_2b_1b_0)_2 \equiv -b_{n-1}2^{n-1} + \sum_{i=0}^{n-2} b_i 2^i.$
C. $(b_{n-1}b_{n-2}\ldots b_2b_1b_0)_2 \equiv -b_{n-1}2^{n-1} + \sum_{i=0}^{n-1} b_i 2^i.$
D. $(b_{n-1}b_{n-2}\ldots b_2b_1b_0)_2 \equiv -b_{n-1}2^{n} + \sum_{i=0}^{n-2} b_i 2^i.$

Your Answer: | Correct Answer: B | Not Attempted | Time taken: 00min 00sec | Discuss

Copyright & Stuff